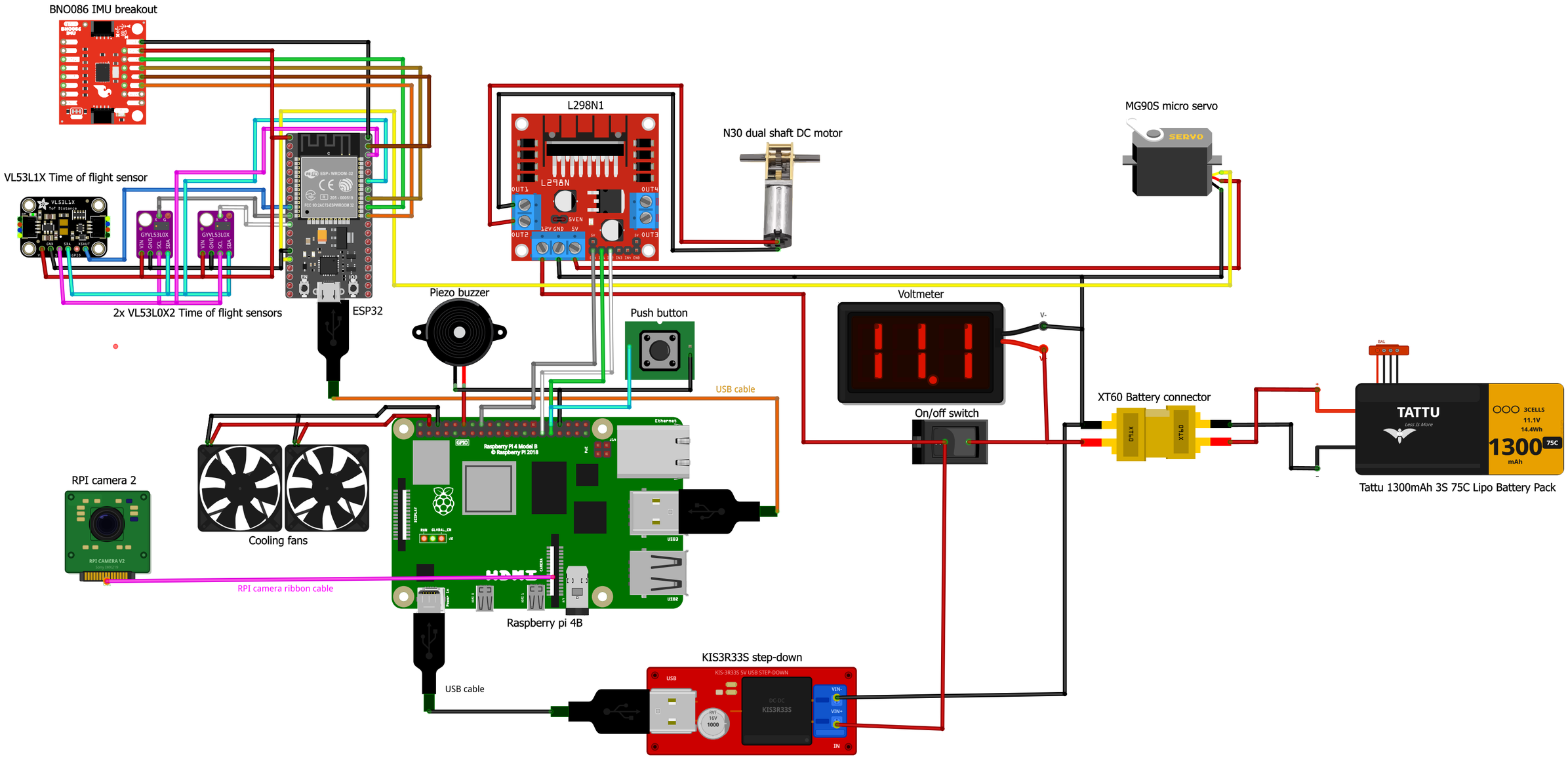
BNO086 IMU breakout
VL53L1X Time of flight sensor
2x VL53L0X2 Time of flight sensors
ESP32
L298N1
N30 dual shaft DC motor
MG90S micro servo
Piezo buzzer
Push button
Voltmeter
USB cable
On/off switch
XT60 Battery connector
Tattu 1300mAh 3S 75C Lipo Battery Pack
RPI camera 2
Cooling fans
RPI camera ribbon cable
Raspberry pi 4B
USB cable
KIS3R33S step-down

fritzing